SCANTOOL
PROUD MANUFACTURER SINCE 1980

Plate and bar stock shear

 # 54000010

Manual sheet shears - SCANTOOL PFS-1

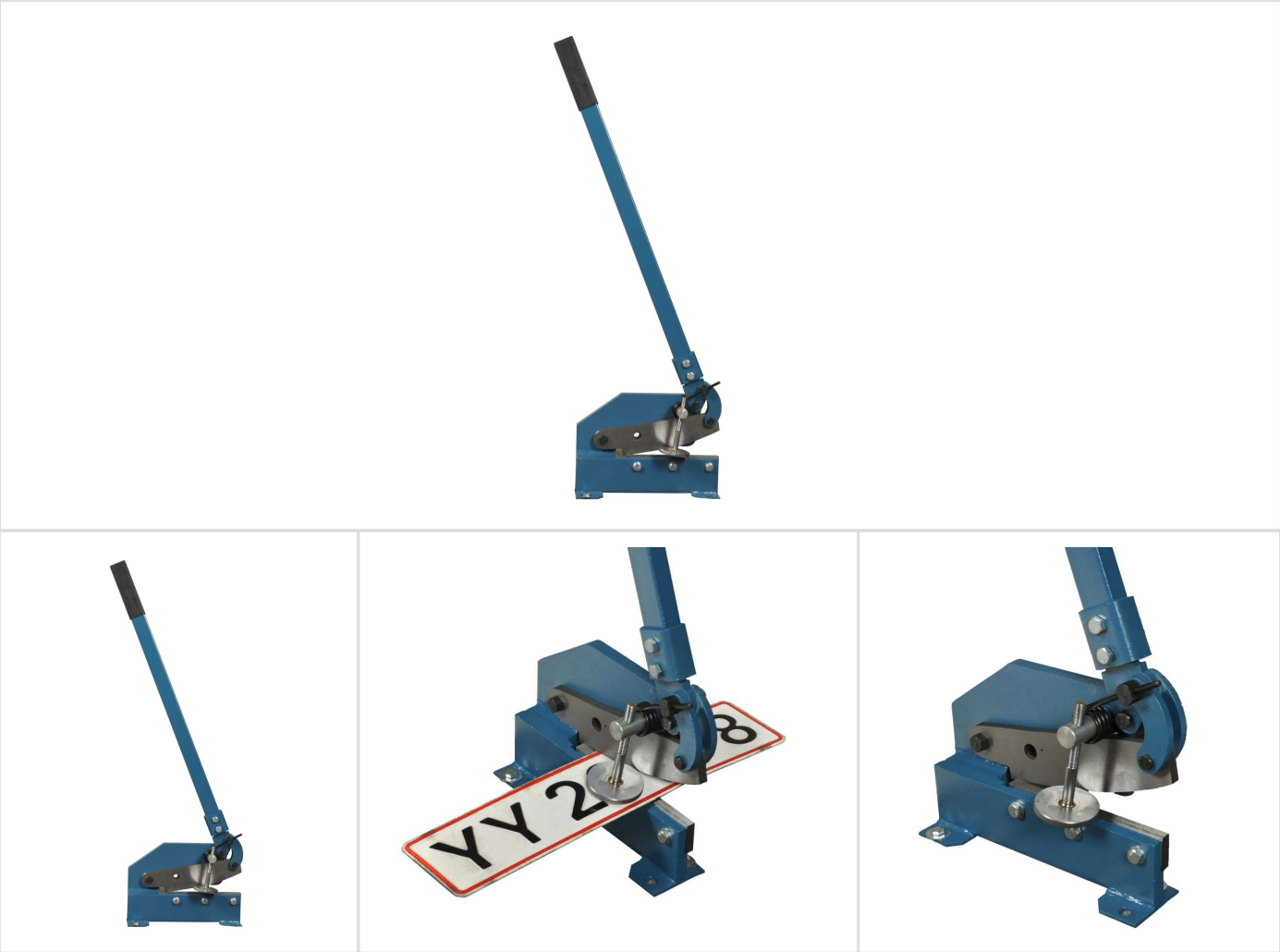

SCANTOOL PFS-1 is a robust plate and bar stock shear with knives for metal sheet, flat iron and round steel.

The machine is complete with material holder and the hand lever is secured by torsion spring. Easy to carry and ideel for assembly work, i work shops and schools and many other places.

Product Link:

https://scantool.dk/en/product/plate-and-bar-stock-shear

Product Specification

SCANTOOL GROUP Industrivej 3-9, 9460 Brovst +45 98 23 60 88 info@scantool-group.dk

Blade length (mm)	200
Sheet thickness steel (mm)	6,0
Flat steel ST37 (mm)	70 x 6
Round steel ST37 (ø mm)	13
Bench model	1
Length (mm)	500
Width (mm)	160
Height (mm)	450
Net weight (kg)	19

Product Link:

https://scantool.dk/en/product/plate-and-bar-stock-shear

SCANTOOL GROUP Industrivej 3-9, 9460 Brovst +45 98 23 60 88 info@scantool-group.dk